Maximum"H" (in)	Allowable Vertical Load (lbs)	Allowable Transverse Load (lbs)	Allowable Longitudinal Load (lbs)
48	2642	0	0
48	791	119	0
48	141	0	22
60	2642	0	0
60	500	75	0
60	116	0	18
72	2642	0	0
72	333	50	0
72	96	0	15

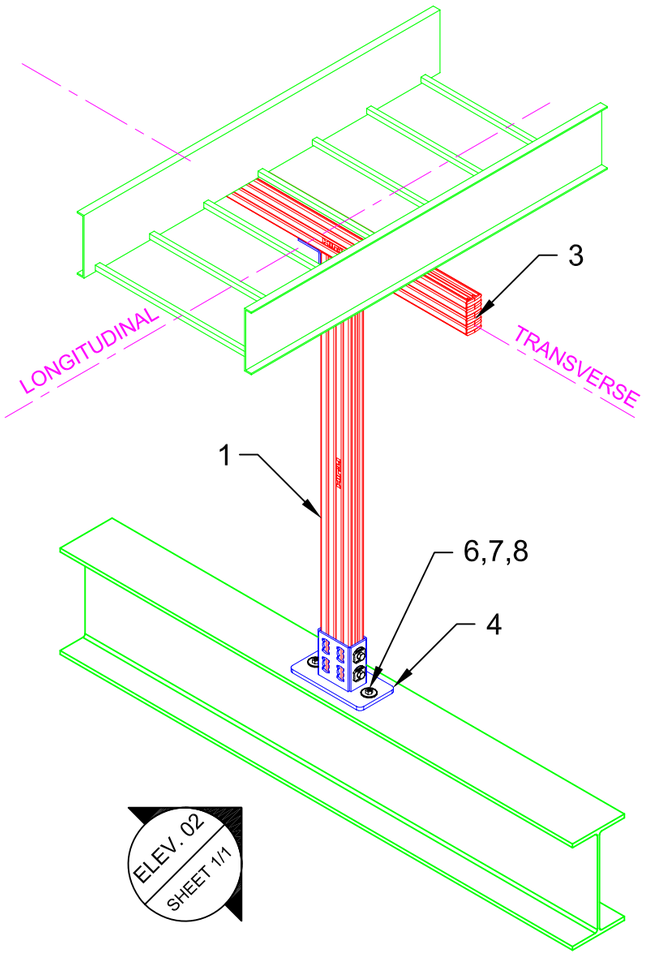

01 ISOMETRIC
N.T.S.

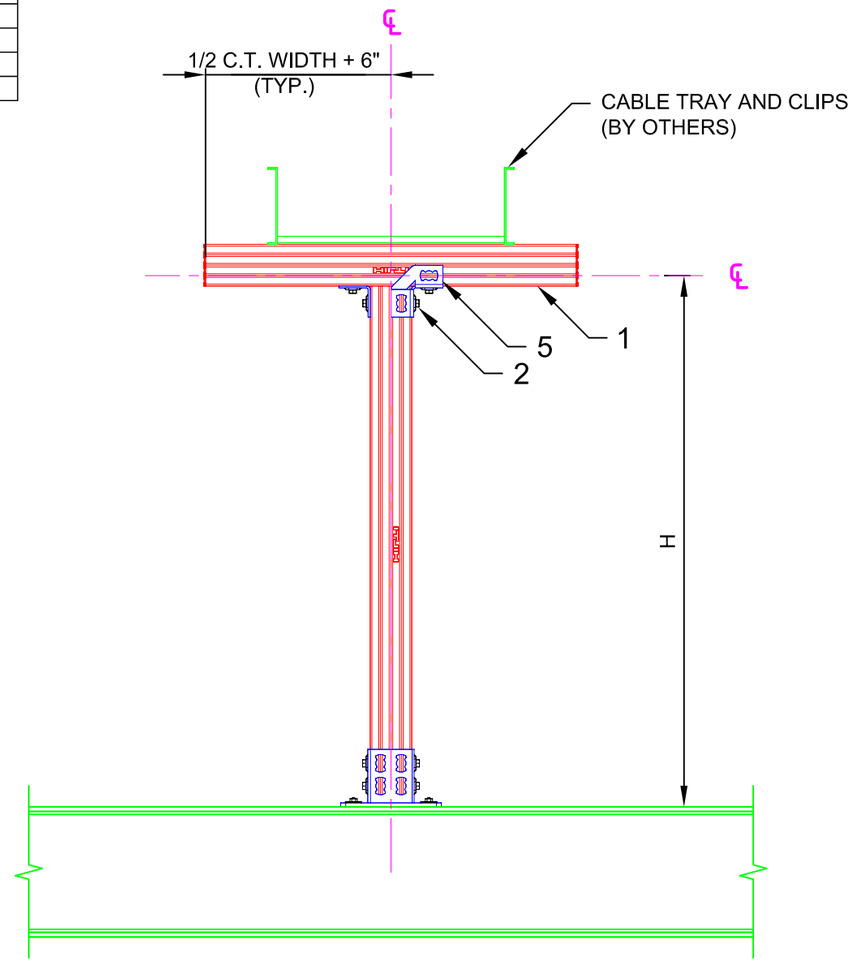

02 ELEVATION
N.T.S.

No.	Unit Qty	Unit	Description	Box Qty	# Boxes Needed	Item No.
1	AS REQ'D	EA	STRUT HS-158-12/HDG 10' B2B	1	AS REQ'D	2007087
2	8	EA	CHANNEL CONNECTOR MQN-HDG PLUS	50	1	387779
3	8	EA	CHANNEL END CAP MEK RED	50	1	244886
4	1	EA	RAIL SUPPORT MQP-82	8	1	369652
5	2	EA	4-HOLE ANGLE MQW-4	10	1	369658
6	2	EA	X-BTW10-24-6 SN12-R	100	1	377076
7	2	EA	HEX NUT-HEAVY DUTY 3/8"	100	1	411752
8	2	EA	FENDER WASHER 3/8"	1000	1	313069

NOTE(S):

1. REFER TO TABLE FOR DIMENSIONAL LIMITATIONS BASED ON CABLE TRAY WIDTH.
2. ALLOWABLE LOADS CONSIDER APPROPRIATE LOAD FACTORS AND LOAD COMBINATIONS PER APPLICABLE CODES AND STANDARDS.
3. ALL LOADS ASSUMED TO ACT AT HORIZONTAL ℄ OF CABLE TRAY WHICH IS SITTING DIRECTLY ON TOP OF HS STRUT, U.N.O.
4. VERTICAL LOAD APPLIED WITH ONE HORIZONTAL LOAD AT A TIME.
5. CABLE TRAY HORIZONTAL OFFSET FROM HS POST ℄ = 0"

All loading and design criteria supplied by customer is assumed accurate. Only the stated Design Assumptions were considered, and must be verified by the responsible Engineer of Record (EOR). The basis of Hilti component and connection design is the published data in the current Hilti Technical Guide, including material and cross-section properties, allowable load values, factors of safety, methods of calculation, and limiting factors. The EOR must verify suitability for any specific application, and the capacity of the supportive structure to receive the shown configuration and associated reaction loads. Modification to components and/or design may alter performance and must be evaluated by the EOR.

PROJECT NAME:

TYPICAL DETAILS

SERVICE REQUEST DESCRIPTION:

CABLE TRAY
T-POST (MQ)
STEEL

DESIGNED BY:	REVIEWED BY:
AJV	ISE
DRAWN BY:	ISSUE DATE:
GAB	22 DEC 14

REVISIONS:

NO:	DESCRIPTION:	DATE:
A	ORIGINAL ISSUE	22 DEC 14

SERVICE REQUEST NUMBER:

TD-CT-TP51-S

DRAWING NUMBER:	SHEET:
01	1/1