Maximum"L1" (in)	Allowable Vertical Load (lbs)	Allowable Transverse Load (lbs)	Allowable Longitudinal Load (lbs)
48	1892	0	0
48	1892	567	0
48	1750	0	525
60	1742	0	0
60	1742	522	
60	1416	0	425
72	1607	0	0
72	1607	482	0
72	1250	0	375

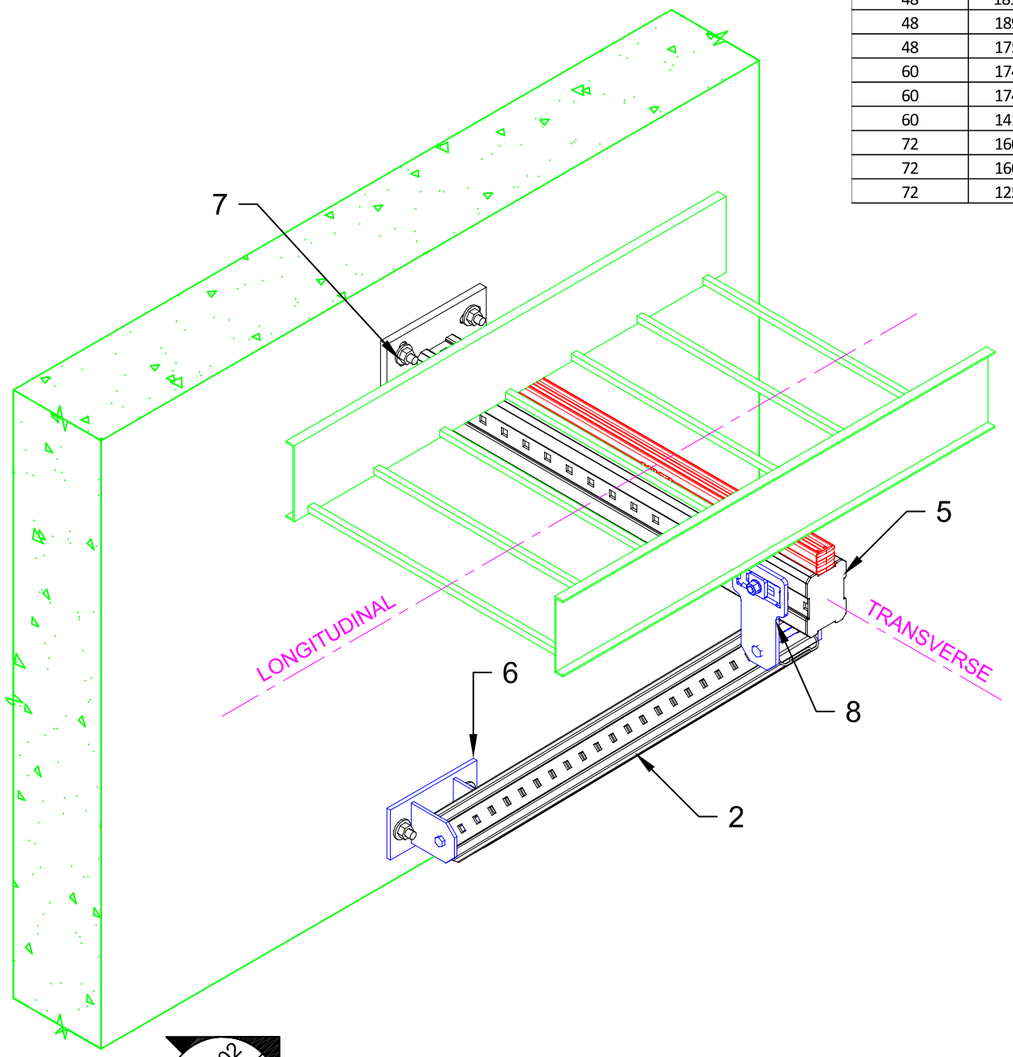

ELEV. 02
SHEET 1/1

01 ISOMETRIC
N.T.S.

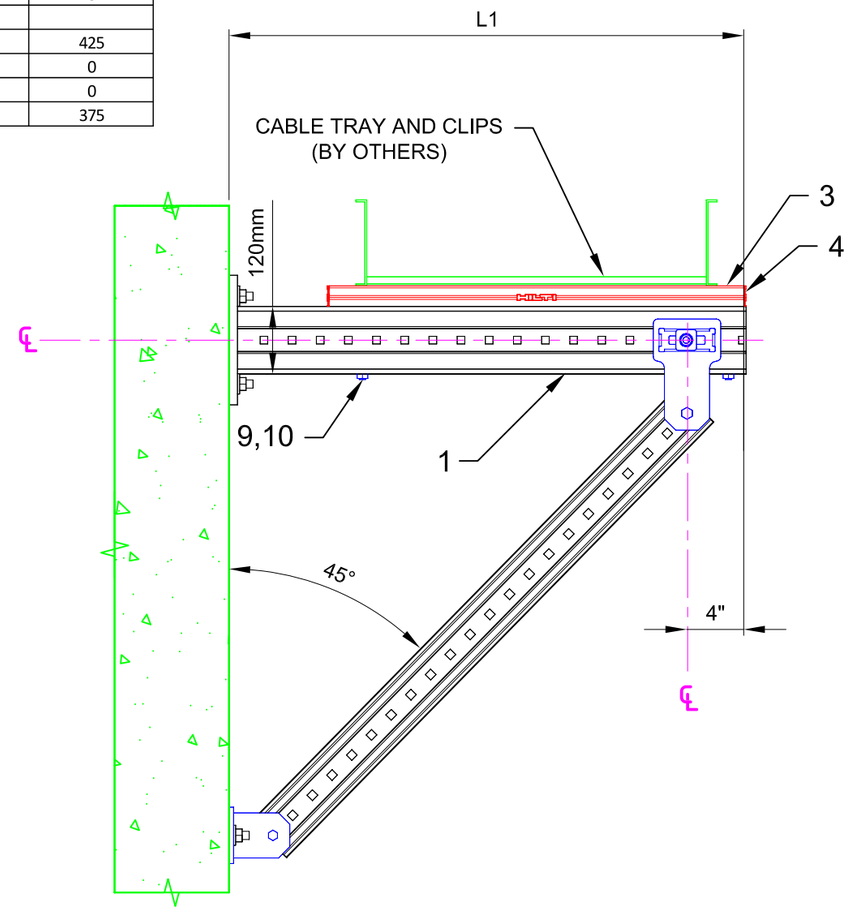

02 ELEVATION
N.T.S.

No.	Unit Qty	Unit	Description	Box Qty	# Boxes Needed	Item No.
1	1	EA	CONNECTOR MIC-C120-D-2000 WELDED BRACKET	1	1	270472
2	AS REQ'D	EA	GIRDER MI-90 3M	1	AS REQ'D	304798
3	AS REQ'D	EA	STRUT HS-158-12/HDG 10'	1	AS REQ'D	407570
4	4	EA	CHANNEL END CAP MEK RED	50	1	244886
5	1	EA	GIRDER END CAP MIA-EC120	25	1	432078
6	1	EA	CONNECTOR MIC-CU-MA CONCRETE	4	1	304828
7	6	EA	USE KB3 OR KB-TZ AS APPROPRIATE	VARIES	VARIES	VARIES
8	1	EA	CONNECTOR MIC-U-MA	2	1	304806
9	2	EA	ONEHAND SCREW MIA-OH120	10	1	304890
10	2	EA	PREVAIL TORQUE HEX NUT M12-F-SL-WS 3/4"	100	1	382897

NOTE(S):

1. ALLOWABLE LOADS CONSIDER APPROPRIATE LOAD FACTORS AND LOAD COMBINATIONS PER APPLICABLE CODES AND STANDARDS.
2. ALL LOADS ASSUMED TO ACT AT HORIZONTAL ℄ OF CABLE TRAY WHICH IS SITTING DIRECTLY ON TOP OF MI GIRDER, U.N.O.
3. VERTICAL LOAD APPLIED WITH ONE HORIZONTAL LOAD AT A TIME.
4. CABLE TRAY HORIZONTAL OFFSET FROM MI POST ℄ = 0"

All loading and design criteria supplied by customer is assumed accurate. Only the stated Design Assumptions were considered, and must be verified by the responsible Engineer of Record (EOR). The basis of Hilti component and connection design is the published data in the current Hilti Technical Guide, including material and cross-section properties, allowable load values, factors of safety, methods of calculation, and limiting factors. The EOR must verify suitability for any specific application, and the capacity of the supportive structure to receive the shown configuration and associated reaction loads. Modification to components and/or design may alter performance and must be evaluated by the EOR.

PROJECT NAME:

TYPICAL DETAILS

SERVICE REQUEST DESCRIPTION:

CABLE TRAY
BRACED CANTILEVER
CONCRETE

DESIGNED BY:	REVIEWED BY:
AJV	ISE
DRAWN BY:	ISSUE DATE:
GAB	22 DEC 14

REVISIONS:

NO:	DESCRIPTION:	DATE:
A	ORIGINAL ISSUE	22 DEC 14

SERVICE REQUEST NUMBER:

TD-CT-BC02-C

DRAWING NUMBER:	SHEET:
01	1/1

Maximum"L1" (in)	Allowable Vertical Load (lbs)	Allowable Transverse Load (lbs)	Allowable Longitudinal Load (lbs)
48	1500	0	0
48	1500	450	0
48	666	0	200
60	1428	0	0
60	1428	428	0
60	540	0	162
72	1392	0	0
72	1392	417	0
72	458	0	137

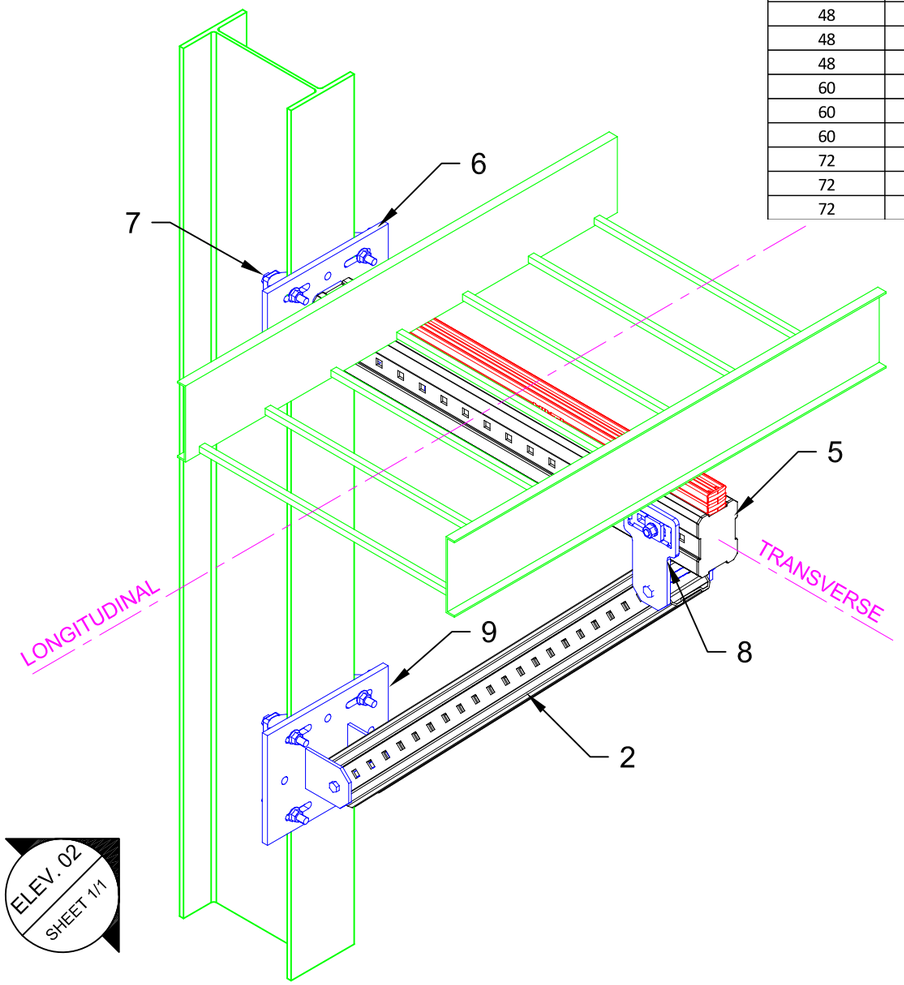

ELEV. 02
SHEET 1/1

01 ISOMETRIC
N.T.S.

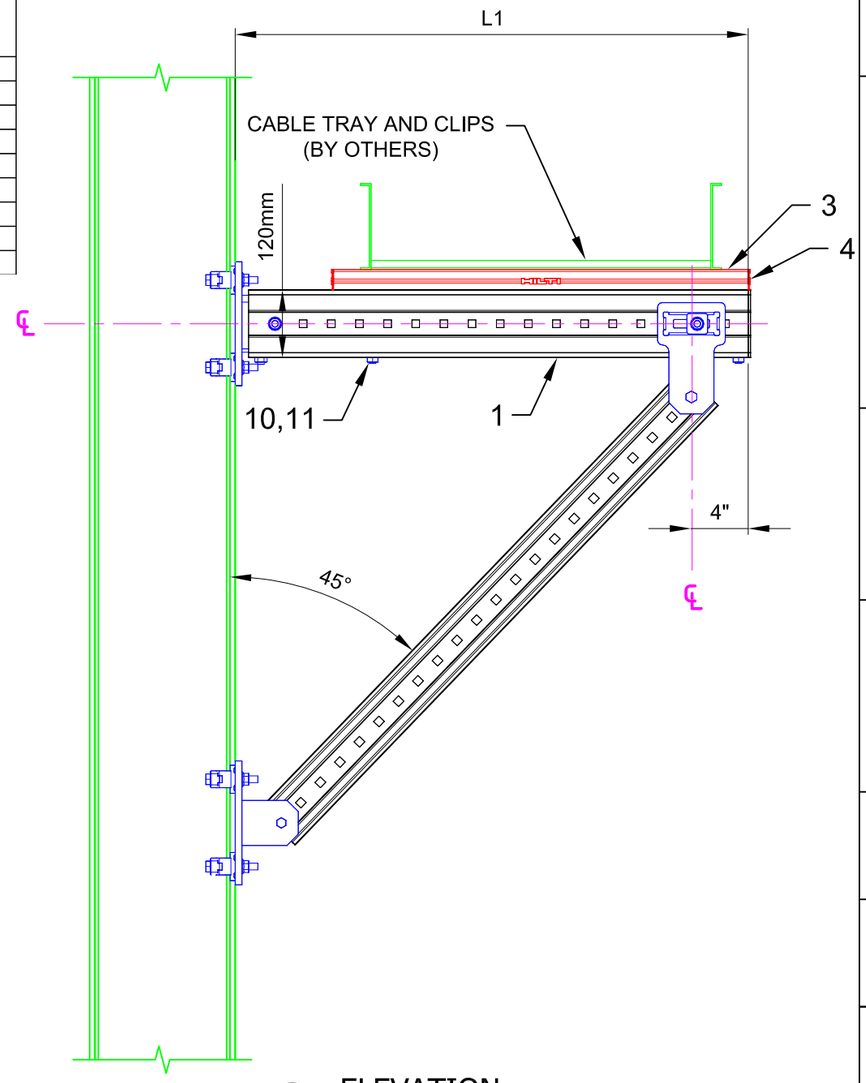

02 ELEVATION
N.T.S.

MIC-S120-X

Beam Width Table

X	'B' Width	Item No.
A	2.9 to 6.5	304818
B	6.5 to 9.2	304819
C	9.2 to 11.8	304820

MIC-SX-MA

Beam Width Table

X	'B' Width	Item No.
A	2.9 to 6.5	304815
B	6.5 to 9.2	304816
C	9.2 to 11.8	304817

No.	Unit Qty	Unit	Description	Box Qty	# Boxes Needed	Item No.
1	AS REQ'D	EA	GIRDER MI-120 3M	1	AS REQ'D	304800
2	AS REQ'D	EA	GIRDER MI-90 3M	1	AS REQ'D	304798
3	AS REQ'D	EA	STRUT HS-158-12/HDG 10'	1	AS REQ'D	407570
4	4	EA	CHANNEL END CAP MEK RED	50	1	244886
5	1	EA	GIRDER END CAP MIA-EC120	25	1	432078
6	1	EA	CONNECTOR MIC-S120-X STEEL (SEE TABLE)	2	1	VARIES
7	8	EA	BEAM CLAMP MI-SGC-M12	16	1	233859
8	1	EA	CONNECTOR MIC-U-MA	2	1	304806
9	1	EA	CONNECTOR MIC-SX-MA STEEL (SEE TABLE)	2	1	VARIES
10	2	EA	ONEHAND SCREW MIA-OH120	10	1	304890
11	2	EA	PREVAIL TORQUE HEX NUT M12-F-SL-WS 3/4"	100	1	382897

NOTE(S):

1. ALLOWABLE LOADS CONSIDER APPROPRIATE LOAD FACTORS AND LOAD COMBINATIONS PER APPLICABLE CODES AND STANDARDS.
2. ALL LOADS ASSUMED TO ACT AT HORIZONTAL ℄ OF CABLE TRAY WHICH IS SITTING DIRECTLY ON TOP OF MI GIRDER, U.N.O.
3. VERTICAL LOAD APPLIED WITH ONE HORIZONTAL LOAD AT A TIME.
4. CABLE TRAY HORIZONTAL OFFSET FROM MI POST ℄ = 0"

All loading and design criteria supplied by customer is assumed accurate. Only the stated Design Assumptions were considered, and must be verified by the responsible Engineer of Record (EOR). The basis of Hilti component and connection design is the published data in the current Hilti Technical Guide, including material and cross-section properties, allowable load values, factors of safety, methods of calculation, and limiting factors. The EOR must verify suitability for any specific application, and the capacity of the supportive structure to receive the shown configuration and associated reaction loads. Modification to components and/or design may alter performance and must be evaluated by the EOR.

PROJECT NAME:

TYPICAL DETAILS

SERVICE REQUEST DESCRIPTION:

CABLE TRAY
BRACED CANTILEVER
STEEL

DESIGNED BY:	REVIEWED BY:
AJV	ISE
DRAWN BY:	ISSUE DATE:
GAB	22 DEC 14

REVISIONS:

NO:	DESCRIPTION:	DATE:
A	ORIGINAL ISSUE	22 DEC 14

SERVICE REQUEST NUMBER:

TD-CT-BC02-S

DRAWING NUMBER:	SHEET:
01	1/1

Maximum"L1" (in)	Allowable Vertical Load (lbs)	Allowable Transverse Load (lbs)	Allowable Longitudinal Load (lbs)
48	641	0	0
48	641	192	0
48	583	0	175
60	464	0	0
60	464	139	0
60	416	0	125
72	357	0	0
72	357	107	0
72	333	0	100

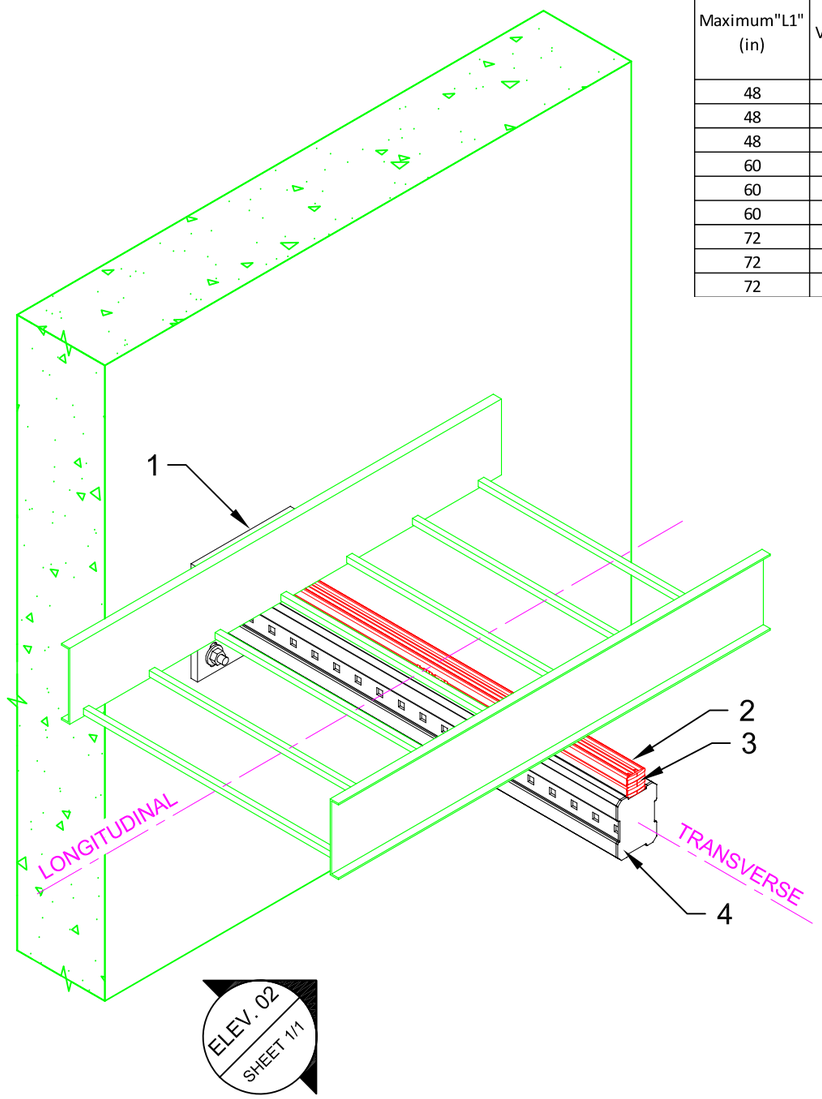

01 ISOMETRIC
N.T.S.

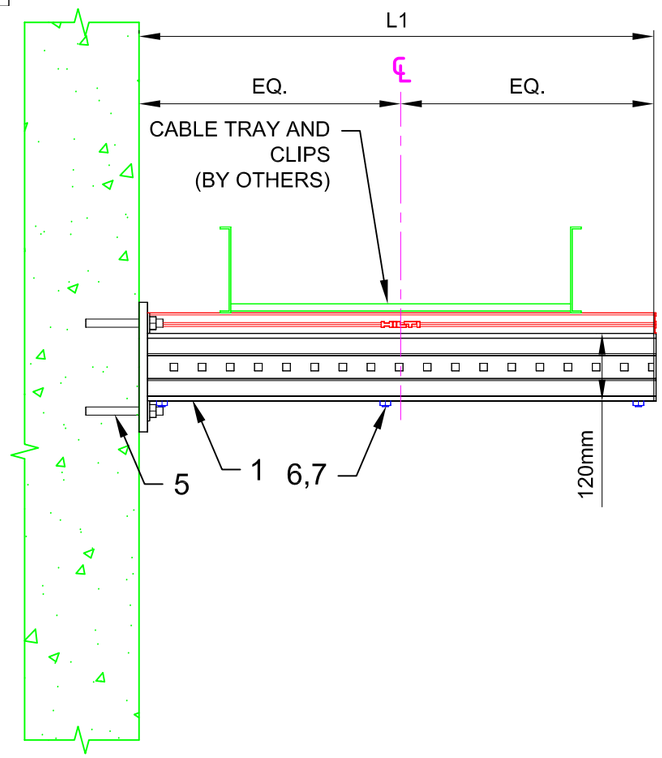

02 ELEVATION
N.T.S.

No.	Unit Qty	Unit	Description	Box Qty	# Boxes Needed	Item No.
1	1	EA	CONNECTOR MIC-C120-D-2000 WELDED BRACKET	1	1	270472
2	AS REQ'D	EA	STRUT HS-158-12/HDG 10'	1	AS REQ'D	407570
3	2	EA	CHANNEL END CAP MEK RED	50	1	244886
4	1	EA	GIRDER END CAP MIA-EC120	25	1	432078
5	4	EA	USE KB3 OR KB-TZ AS APPROPRIATE	VARIES	VARIES	VARIES
6	3	EA	ONEHAND SCREW MIA-OH120	10	1	304890
7	3	EA	PREVAIL TORQUE HEX NUT M12-F-SL-WS 3/4"	100	1	382897

NOTE(S):

1. ALLOWABLE LOADS CONSIDER APPROPRIATE LOAD FACTORS AND LOAD COMBINATIONS PER APPLICABLE CODES AND STANDARDS.
2. ALL LOADS ASSUMED TO ACT AT HORIZONTAL ℄ OF CABLE TRAY WHICH IS SITTING DIRECTLY ON TOP OF MI GIRDER, U.N.O.
3. VERTICAL LOAD APPLIED WITH ONE HORIZONTAL LOAD AT A TIME.
4. CABLE TRAY HORIZONTAL OFFSET FROM MI POST ℄ = 0"

All loading and design criteria supplied by customer is assumed accurate. Only the stated Design Assumptions were considered, and must be verified by the responsible Engineer of Record (EOR). The basis of Hilti component and connection design is the published data in the current Hilti Technical Guide, including material and cross-section properties, allowable load values, factors of safety, methods of calculation, and limiting factors. The EOR must verify suitability for any specific application, and the capacity of the supportive structure to receive the shown configuration and associated reaction loads. Modification to components and/or design may alter performance and must be evaluated by the EOR.

PROJECT NAME:

TYPICAL DETAILS

SERVICE REQUEST DESCRIPTION:

CABLE TRAY
CANTILEVER
CONCRETE

DESIGNED BY:	REVIEWED BY:
AJV	ISE
DRAWN BY:	ISSUE DATE:
GAB	22 DEC 14

REVISIONS:

NO:	DESCRIPTION:	DATE:
A	ORIGINAL ISSUE	22 DEC 14

SERVICE REQUEST NUMBER:

TD-CT-C05-C

DRAWING NUMBER:	SHEET:
01	1/1

Maximum"L1" (in)	Allowable Vertical Load (lbs)	Allowable Transverse Load (lbs)	Allowable Longitudinal Load (lbs)
48	214	0	0
48	214	64	0
48	214	0	64
60	142	0	0
60	142	42	0
60	142	0	42
72	107	0	0
72	107	32	0
72	107	0	32

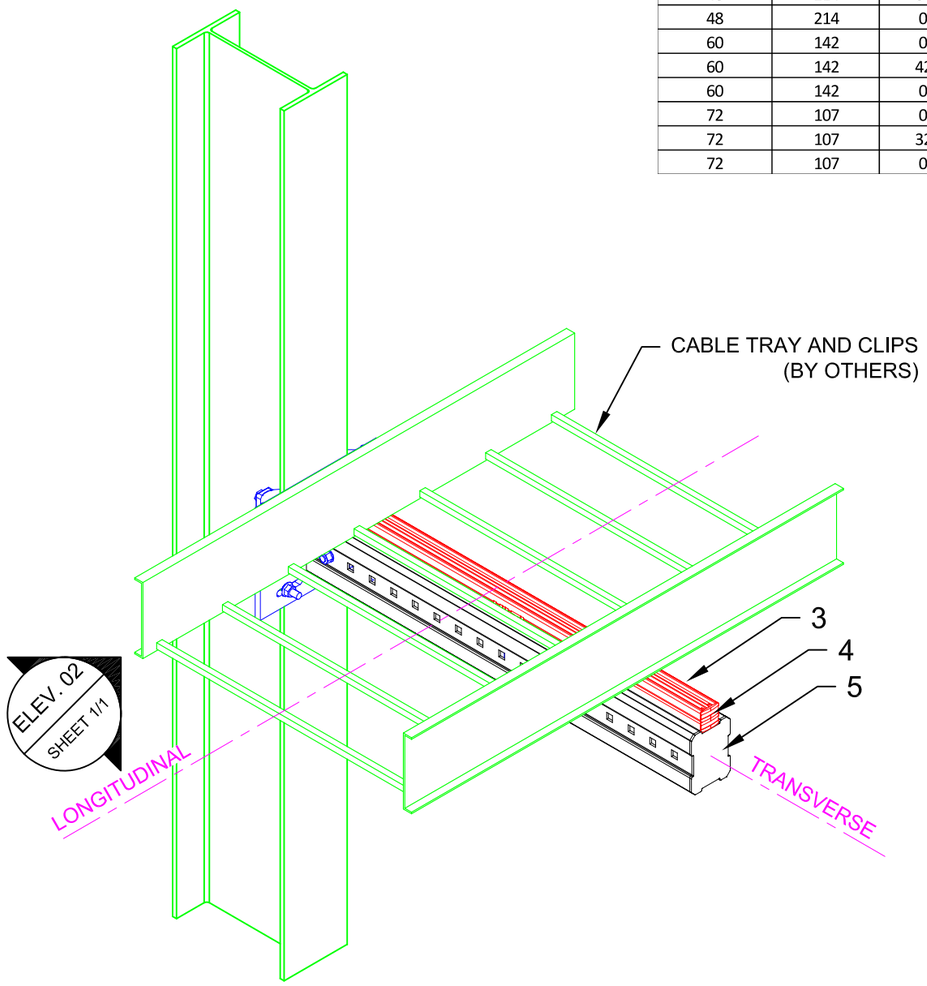

01 ISOMETRIC
N.T.S.

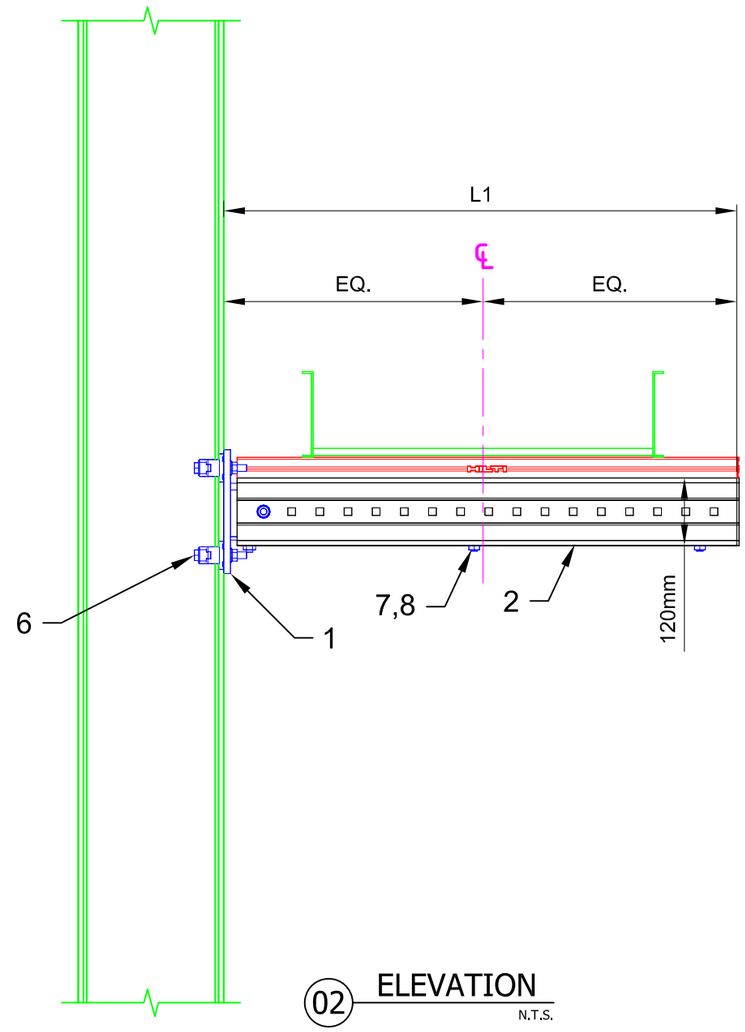

02 ELEVATION
N.T.S.

MIC-S120-X

Beam Width Table

X	'B' Width	Item No.
A	2.9 to 6.5	304818
B	6.5 to 9.2	304819
C	9.2 to 11.8	304820

MIC-SX-MA

Beam Width Table

X	'B' Width	Item No.
A	2.9 to 6.5	304815
B	6.5 to 9.2	304816
C	9.2 to 11.8	304817

No.	Unit Qty	Unit	Description	Box Qty	# Boxes Needed	Item No.
1	1	EA	CONNECTOR MIC-S120-X STEEL (SEE TABLE)	2	1	VARIES
2	AS REQ'D	EA	GIRDER MI-120 3M	1	AS REQ'D	304800
3	AS REQ'D	EA	STRUT HS-158-12/HDG 10'	1	AS REQ'D	407570
4	2	EA	CHANNEL END CAP MEK RED	50	1	244886
5	1	EA	GIRDER END CAP MIA-EC120	25	1	432078
6	4	EA	BEAM CLAMP MI-SGC-M12	16	1	233859
7	3	EA	ONEHAND SCREW MIA-OH120	10	1	304890
8	3	EA	PREVAIL TORQUE HEX NUT M12-F-SL-WS 3/4"	100	1	382897

NOTE(S):

1. ALLOWABLE LOADS CONSIDER APPROPRIATE LOAD FACTORS AND LOAD COMBINATIONS PER APPLICABLE CODES AND STANDARDS.
2. ALL LOADS ASSUMED TO ACT AT HORIZONTAL ℄ OF CABLE TRAY WHICH IS SITTING DIRECTLY ON TOP OF MI GIRDER, U.N.O.
3. VERTICAL LOAD APPLIED WITH ONE HORIZONTAL LOAD AT A TIME.
4. CABLE TRAY HORIZONTAL OFFSET FROM MI POST ℄ = 0"

All loading and design criteria supplied by customer is assumed accurate. Only the stated Design Assumptions were considered, and must be verified by the responsible Engineer of Record (EOR). The basis of Hilti component and connection design is the published data in the current Hilti Technical Guide, including material and cross-section properties, allowable load values, factors of safety, methods of calculation, and limiting factors. The EOR must verify suitability for any specific application, and the capacity of the supportive structure to receive the shown configuration and associated reaction loads. Modification to components and/or design may alter performance and must be evaluated by the EOR.

PROJECT NAME:

TYPICAL DETAILS

SERVICE REQUEST DESCRIPTION:

CABLE TRAY CANTILEVER STEEL

DESIGNED BY:	REVIEWED BY:
AJV	ISE
DRAWN BY:	ISSUE DATE:
GAB	22 DEC 14

REVISIONS:

NO:	DESCRIPTION:	DATE:
A	ORIGINAL ISSUE	22 DEC 14

SERVICE REQUEST NUMBER:

TD-CT-C05-S

DRAWING NUMBER:	SHEET:
01	1/1

Maximum"H" (in)	Allowable Vertical Load (lbs)	Allowable Transverse Load (lbs)	Allowable Longitudinal Load (lbs)
48	3285	0	0
48	2541	762	0
48	3125	0	937
60	3285	0	0
60	2541	762	0
60	3083	0	925
72	3285	0	0
72	2500	750	0
72	2416	0	725

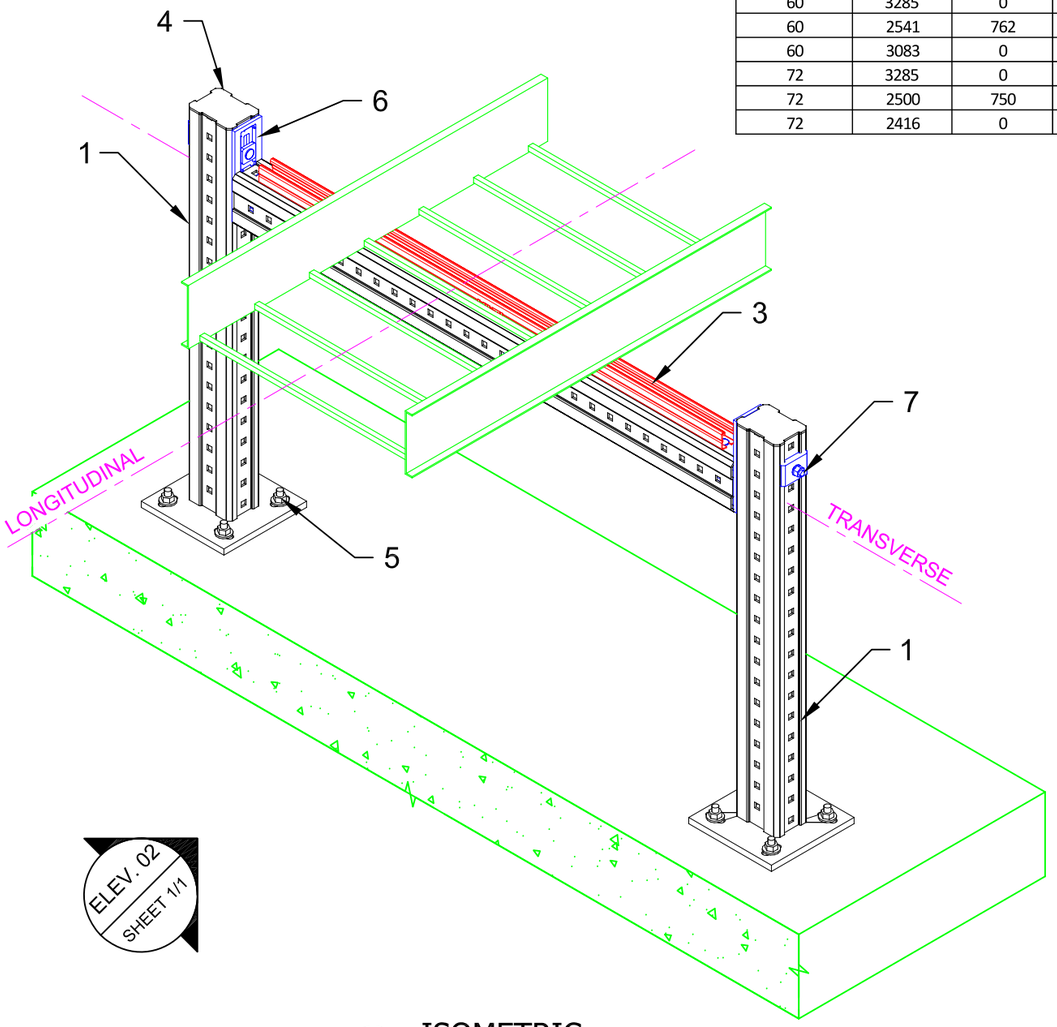

ELEV. 02
SHEET 1/1

01 ISOMETRIC
N.T.S.

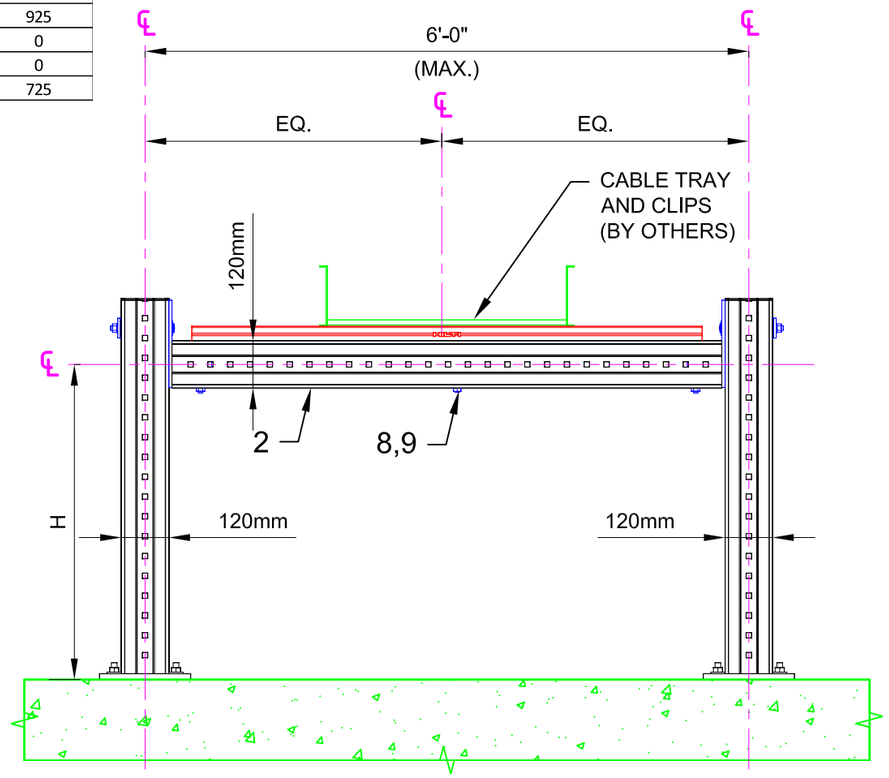

02 ELEVATION
N.T.S.

No.	Unit Qty	Unit	Description	Box Qty	# Boxes Needed	Item No.
1	2	EA	CONNECTOR MIC-C120-D-2000 WELDED BRACKET	1	2	270472
2	AS REQ'D	EA	GIRDER MI-120 3M	1	AS REQ'D	304800
3	AS REQ'D	EA	STRUT HS-158-12/HDG 10'	1	AS REQ'D	407570
4	2	EA	GIRDER END CAP MIA-EC120	25	1	432078
5	8	EA	USE KB3 OR KB-TZ AS APPROPRIATE	VARIES	VARIES	VARIES
6	2	EA	CONNECTOR MIC-120-U	4	1	304804
7	2	EA	EASYHAND SCREW MIA-EH120	10	1	304888
8	3	EA	ONEHAND SCREW MIA-OH120	10	1	304890
9	3	EA	PREVAIL TORQUE HEX NUT M12-F-SL-WS 3/4"	100	1	382897

NOTE(S):

1. ALLOWABLE LOADS CONSIDER APPROPRIATE LOAD FACTORS AND LOAD COMBINATIONS PER APPLICABLE CODES AND STANDARDS.
2. ALL LOADS ASSUMED TO ACT AT HORIZONTAL ℄ OF CABLE TRAY WHICH IS SITTING DIRECTLY ON TOP OF MI GIRDER, U.N.O.
3. VERTICAL LOAD APPLIED WITH ONE HORIZONTAL LOAD AT A TIME.
4. CABLE TRAY HORIZONTAL OFFSET FROM MI POST ℄ = 0"

All loading and design criteria supplied by customer is assumed accurate. Only the stated Design Assumptions were considered, and must be verified by the responsible Engineer of Record (EOR). The basis of Hilti component and connection design is the published data in the current Hilti Technical Guide, including material and cross-section properties, allowable load values, factors of safety, methods of calculation, and limiting factors. The EOR must verify suitability for any specific application, and the capacity of the supportive structure to receive the shown configuration and associated reaction loads. Modification to components and/or design may alter performance and must be evaluated by the EOR.

PROJECT NAME:

TYPICAL DETAILS

SERVICE REQUEST DESCRIPTION:

CABLE TRAY
GOALPOST
CONCRETE

DESIGNED BY:	REVIEWED BY:
AJV	ISE
DRAWN BY:	ISSUE DATE:
GAB	22 DEC 14

REVISIONS:

NO:	DESCRIPTION:	DATE:
A	ORIGINAL ISSUE	22 DEC 14

SERVICE REQUEST NUMBER:

TD-CT-GP04-C

DRAWING NUMBER:	SHEET:
01	1/1

Maximum"H" (in)	Allowable Vertical Load (lbs)	Allowable Transverse Load (lbs)	Allowable Longitudinal Load (lbs)
48	3285	0	0
48	1416	425	0
48	1208	0	362
60	3285	0	0
60	1083	325	0
60	958	0	287
72	3285	0	0
72	916	275	0
72	750	0	225

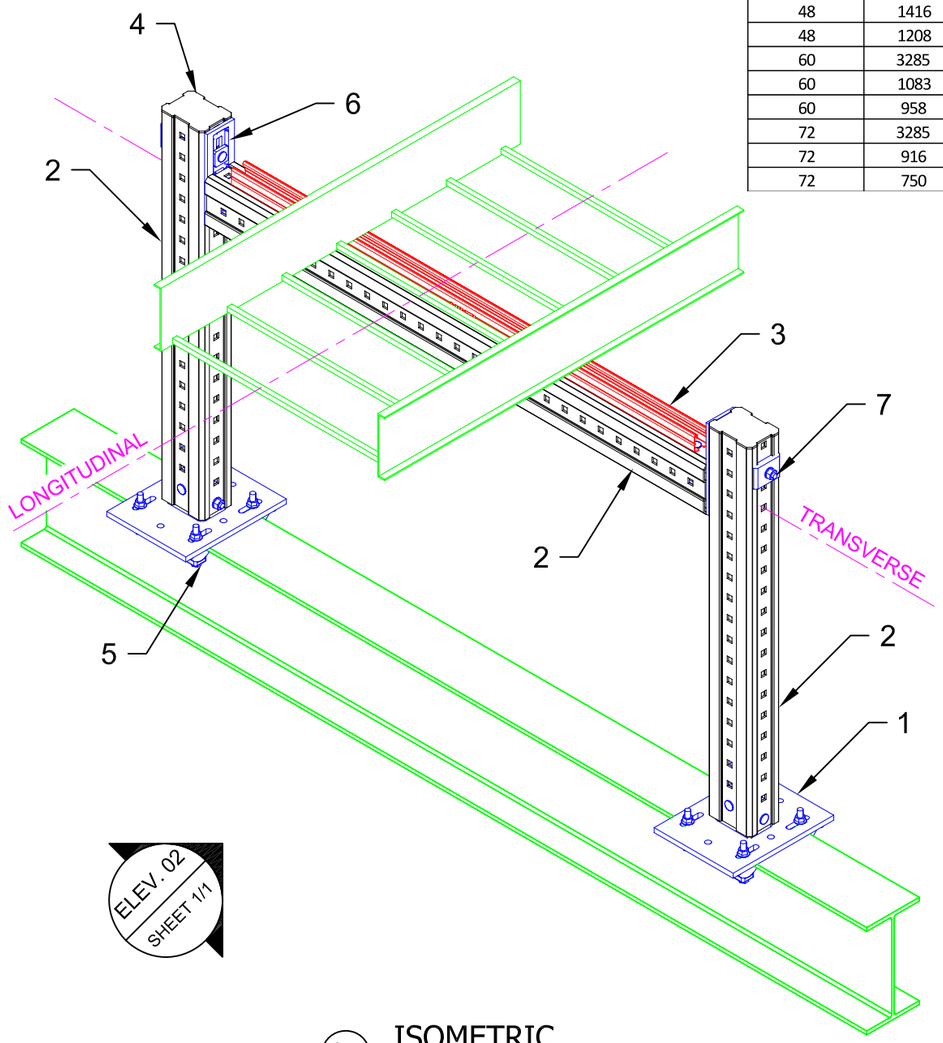

ELEV. 02
SHEET 1/1

01 ISOMETRIC
N.T.S.

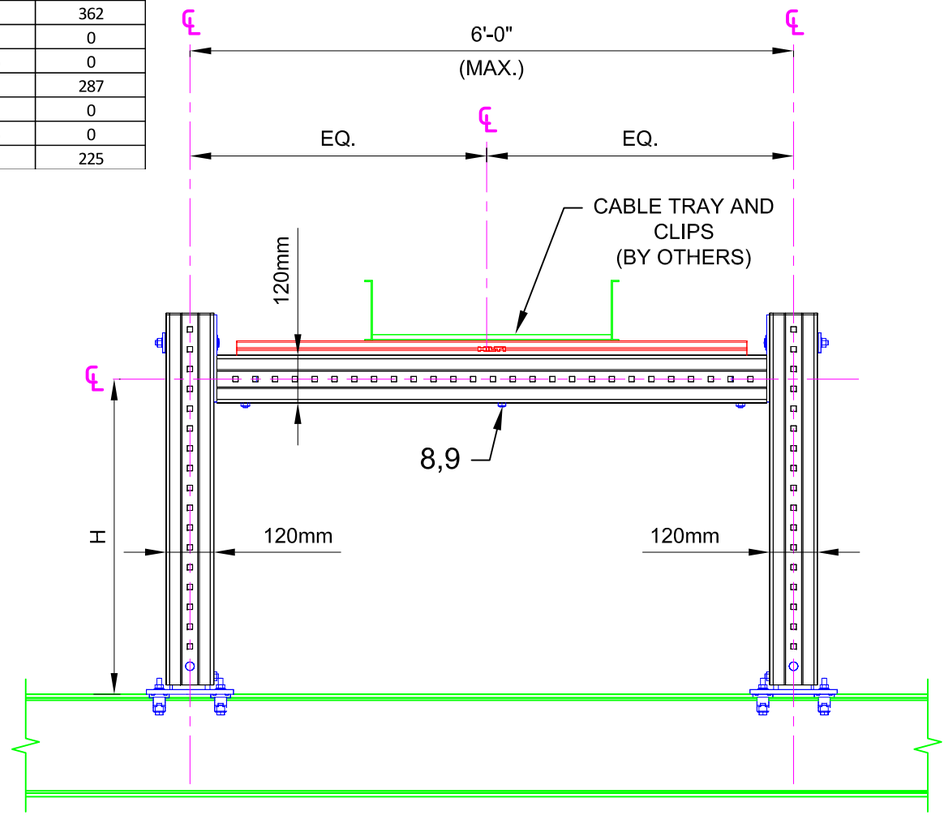

02 ELEVATION
N.T.S.

MIC-S120-X

Beam Width Table

X	'B' Width	Item No.
A	2.9 to 6.5	304818
B	6.5 to 9.2	304819
C	9.2 to 11.8	304820

No.	Unit Qty	Unit	Description	Box Qty	# Boxes Needed	Item No.
1	2	EA	CONNECTOR MIC-S120-X STEEL (SEE TABLE)	2	1	VARIES
2	AS REQ'D	EA	GIRDER MI-120 3M	1	AS REQ'D	304800
3	AS REQ'D	EA	STRUT HS-158-12/HDG 10'	1	AS REQ'D	407570
4	2	EA	GIRDER END CAP MIA-EC120	25	1	432078
5	8	EA	BEAM CLAMP MI-SGC-M12	16	1	233859
6	2	EA	CONNECTOR MIC-120-U	4	1	304804
7	2	EA	EASYHAND SCREW MIA-EH120	10	1	304888
8	3	EA	ONEHAND SCREW MIA-OH120	10	1	304890
9	3	EA	PREVAIL TORQUE HEX NUT M12-F-SL-WS 3/4"	100	1	382897

NOTE(S):

1. ALLOWABLE LOADS CONSIDER APPROPRIATE LOAD FACTORS AND LOAD COMBINATIONS PER APPLICABLE CODES AND STANDARDS.
2. ALL LOADS ASSUMED TO ACT AT HORIZONTAL ℄ OF CABLE TRAY WHICH IS SITTING DIRECTLY ON TOP OF MI GIRDER, U.N.O.
3. VERTICAL LOAD APPLIED WITH ONE HORIZONTAL LOAD AT A TIME.
4. CABLE TRAY HORIZONTAL OFFSET FROM MI POST ℄ = 0"

All loading and design criteria supplied by customer is assumed accurate. Only the stated Design Assumptions were considered, and must be verified by the responsible Engineer of Record (EOR). The basis of Hilti component and connection design is the published data in the current Hilti Technical Guide, including material and cross-section properties, allowable load values, factors of safety, methods of calculation, and limiting factors. The EOR must verify suitability for any specific application, and the capacity of the supportive structure to receive the shown configuration and associated reaction loads. Modification to components and/or design may alter performance and must be evaluated by the EOR.

PROJECT NAME:

TYPICAL DETAILS

SERVICE REQUEST DESCRIPTION:

CABLE TRAY
GOALPOST
STEEL

DESIGNED BY:	REVIEWED BY:
AJV	ISE
DRAWN BY:	ISSUE DATE:
GAB	22 DEC 14

REVISIONS:

NO:	DESCRIPTION:	DATE:
A	ORIGINAL ISSUE	22 DEC 14

SERVICE REQUEST NUMBER:

TD-CT-GP04-S

DRAWING NUMBER:	SHEET:
01	1/1

Maximum"H" (in)	Allowable Vertical Load (lbs)	Allowable Transverse Load (lbs)	Allowable Longitudinal Load (lbs)
48	6714	0	0
48	2290	687	0
48	1916	0	575
60	6714	0	0
60	1833	550	0
60	1666	0	500
72	6714	0	0
72	1542	462	0
72	1208	0	362

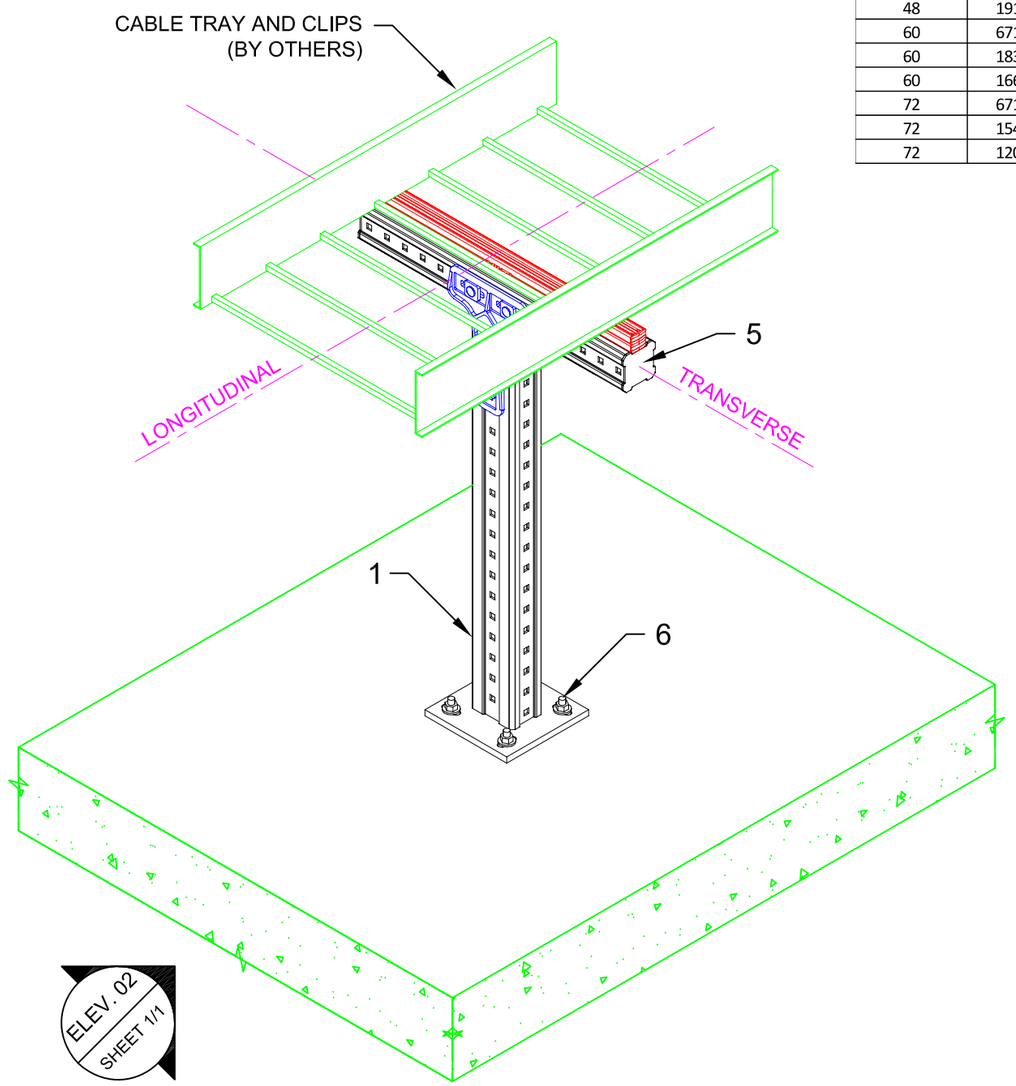

01 ISOMETRIC
N.T.S.

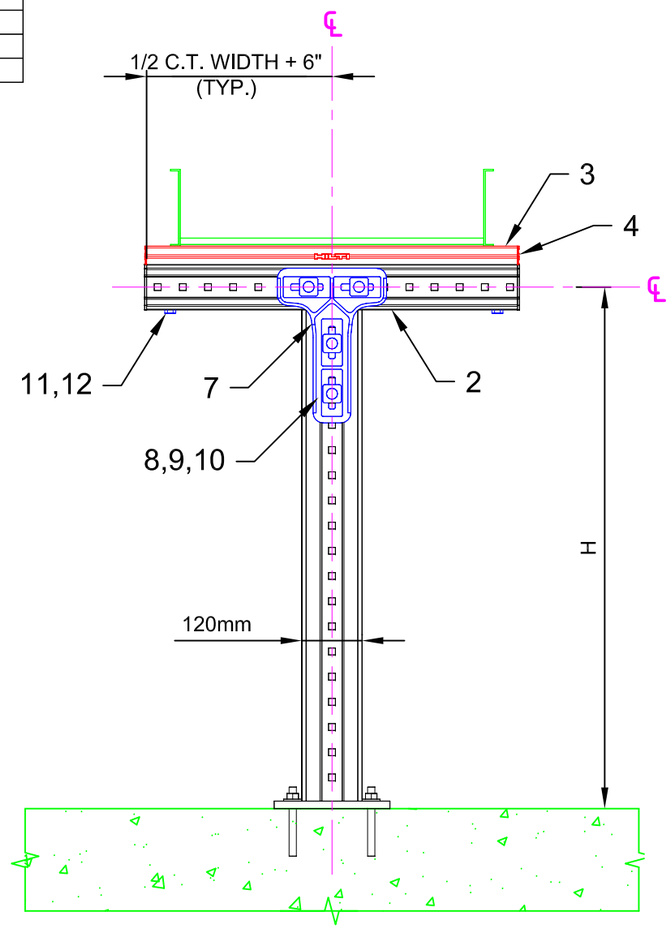

02 ELEVATION
N.T.S.

No.	Unit Qty	Unit	Description	Box Qty	# Boxes Needed	Item No.
1	1	EA	CONNECTOR MIC-C120-D-2000 WELDED BRACKET	1	1	270472
2	AS REQ'D	EA	GIRDER MI-90 3M	1	AS REQ'D	304798
3	AS REQ'D	EA	STRUT HS-158-12/HDG 10'	1	AS REQ'D	407570
4	4	EA	CHANNEL END CAP MEK RED	50	1	244886
5	2	EA	GIRDER END CAP MIA-EC90	25	1	432077
6	4	EA	USE KB3 OR KB-TZ AS APPROPRIATE	VARIES	VARIES	VARIES
7	1	EA	CONNECTOR MIC-90-LH	3	1	2048107
8	4	EA	EASYHAND SCREW MIA-EH90	10	1	304887
9	4	EA	PREVAIL TORQUE HEX NUT M12-F-SL-WS 3/4"	100	1	382897
10	4	EA	TOOTHED PLATE MIA-TP	20	1	305707
11	2	EA	ONEHAND SCREW MIA-OH90	10	1	304889
12	2	EA	PREVAIL TORQUE HEX NUT M12-F-SL-WS 3/4"	100	1	382897

NOTE(S):

1. ALLOWABLE LOADS CONSIDER APPROPRIATE LOAD FACTORS AND LOAD COMBINATIONS PER APPLICABLE CODES AND STANDARDS.
2. ALL LOADS ASSUMED TO ACT AT HORIZONTAL ℄ OF CABLE TRAY WHICH IS SITTING DIRECTLY ON TOP OF MI GIRDER, U.N.O.
3. VERTICAL LOAD APPLIED WITH ONE HORIZONTAL LOAD AT A TIME.
4. CABLE TRAY HORIZONTAL OFFSET FROM MI POST ℄ = 0"

All loading and design criteria supplied by customer is assumed accurate. Only the stated Design Assumptions were considered, and must be verified by the responsible Engineer of Record (EOR). The basis of Hilti component and connection design is the published data in the current Hilti Technical Guide, including material and cross-section properties, allowable load values, factors of safety, methods of calculation, and limiting factors. The EOR must verify suitability for any specific application, and the capacity of the supportive structure to receive the shown configuration and associated reaction loads. Modification to components and/or design may alter performance and must be evaluated by the EOR.

PROJECT NAME:

TYPICAL DETAILS

SERVICE REQUEST DESCRIPTION:

CABLE TRAY
T-POST
CONCRETE

DESIGNED BY:	REVIEWED BY:
AJV	ISE
DRAWN BY:	ISSUE DATE:
GAB	22 DEC 14

REVISIONS:

NO:	DESCRIPTION:	DATE:
A	ORIGINAL ISSUE	22 DEC 14

SERVICE REQUEST NUMBER:

TD-CT-TP01-C

DRAWING NUMBER:	SHEET:
01	1/1

Maximum"H" (in)	Allowable Vertical Load (lbs)	Allowable Transverse Load (lbs)	Allowable Longitudinal Load (lbs)
48	6714	0	0
48	790	237	0
48	583	0	175
60	6714	0	0
60	625	187	0
60	458	0	137
72	6714	0	0
72	500	150	0
72	375	0	112

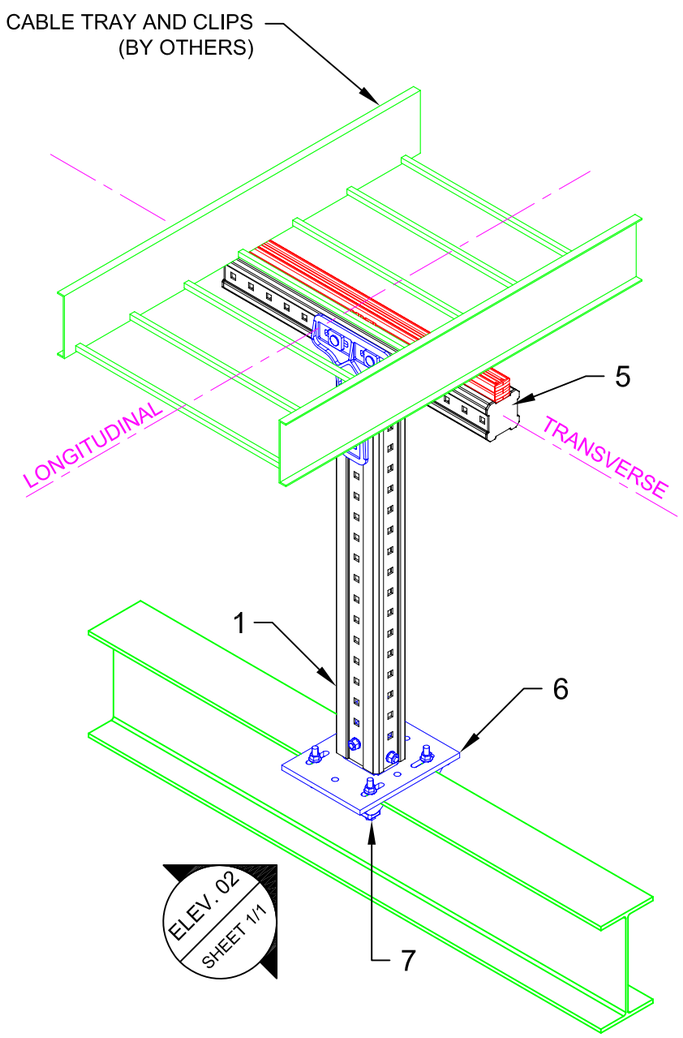

01 ISOMETRIC
N.T.S.

MIC-S120-X

Beam Width Table

X	'B' Width	Item No.
A	2.9 to 6.5	304818
B	6.5 to 9.2	304819
C	9.2 to 11.8	304820

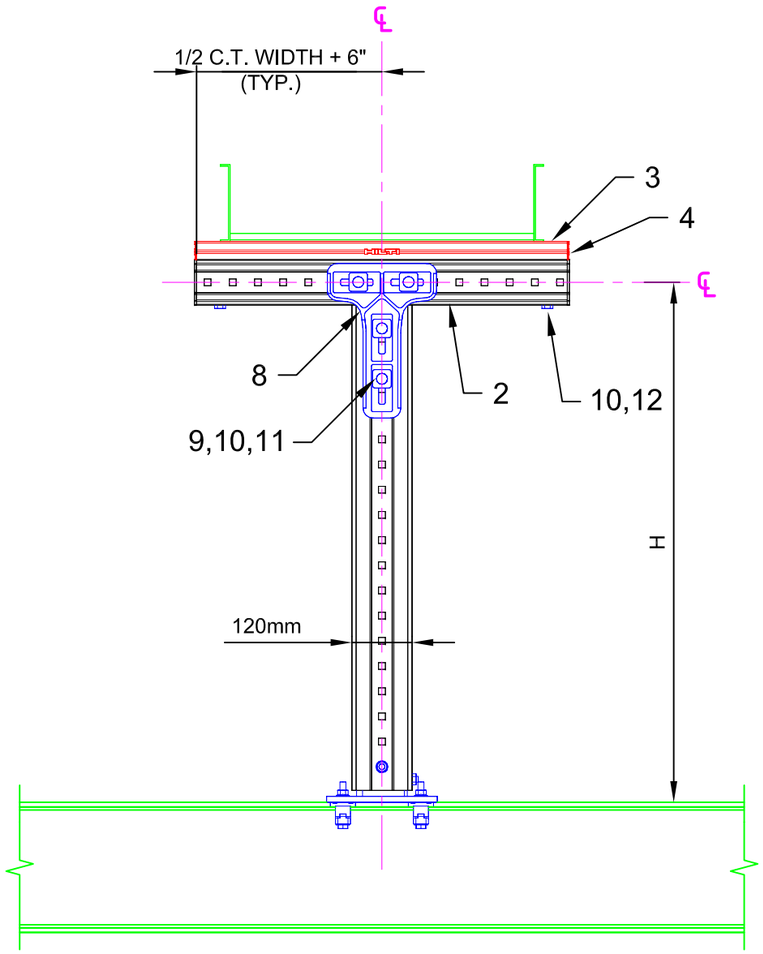

02 ELEVATION
N.T.S.

No.	Unit Qty	Unit	Description	Box Qty	# Boxes Needed	Item No.
1	AS REQ'D	EA	GIRDER MI-120 3M	1	AS REQ'D	304800
2	AS REQ'D	EA	GIRDER MI-90 3M	1	AS REQ'D	304798
3	AS REQ'D	EA	STRUT HS-158-12/HDG 10'	1	AS REQ'D	407570
4	4	EA	CHANNEL END CAP MEK RED	50	1	244886
5	2	EA	GIRDER END CAP MIA-EC90	25	1	432077
6	1	EA	CONNECTOR MIC-S120-X STEEL (SEE TABLE)	2	1	VARIES
7	4	EA	BEAM CLAMP MI-SGC-M12	16	1	233859
8	1	EA	CONNECTOR MIC-90-LH	3	1	2048107
9	4	EA	EASYHAND SCREW MIA-EH90	10	1	304887
10	6	EA	PREVAIL TORQUE HEX NUT M12-F-SL-WS 3/4"	100	1	382897
11	4	EA	TOOTHED PLATE MIA-TP	20	1	305707
12	2	EA	ONEHAND SCREW MIA-OH90	10	1	304889

NOTE(S):

1. ALLOWABLE LOADS CONSIDER APPROPRIATE LOAD FACTORS AND LOAD COMBINATIONS PER APPLICABLE CODES AND STANDARDS.
2. ALL LOADS ASSUMED TO ACT AT HORIZONTAL ℄ OF CABLE TRAY WHICH IS SITTING DIRECTLY ON TOP OF MI GIRDER, U.N.O.
3. VERTICAL LOAD APPLIED WITH ONE HORIZONTAL LOAD AT A TIME.
4. CABLE TRAY HORIZONTAL OFFSET FROM MI POST ℄ = 0"

All loading and design criteria supplied by customer is assumed accurate. Only the stated Design Assumptions were considered, and must be verified by the responsible Engineer of Record (EOR). The basis of Hilti component and connection design is the published data in the current Hilti Technical Guide, including material and cross-section properties, allowable load values, factors of safety, methods of calculation, and limiting factors. The EOR must verify suitability for any specific application, and the capacity of the supportive structure to receive the shown configuration and associated reaction loads. Modification to components and/or design may alter performance and must be evaluated by the EOR.

PROJECT NAME:

TYPICAL DETAILS

SERVICE REQUEST DESCRIPTION:

CABLE TRAY
T-POST
STEEL

DESIGNED BY:	REVIEWED BY:
AJV	ISE
DRAWN BY:	ISSUE DATE:
GAB	22 DEC 14

REVISIONS:

NO:	DESCRIPTION:	DATE:
A	ORIGINAL ISSUE	22 DEC 14

SERVICE REQUEST NUMBER:

TD-CT-TP01-S

DRAWING NUMBER:	SHEET:
01	1/1

Maximum"H" (in)	Allowable Vertical Load (lbs)	Allowable Transverse Load (lbs)	Allowable Longitudinal Load (lbs)
48	3285	0	0
48	2541	762	0
48	3125	0	937
60	3285	0	0
60	2541	762	0
60	3083	0	925
72	3285	0	0
72	2500	750	0
72	2416	0	725

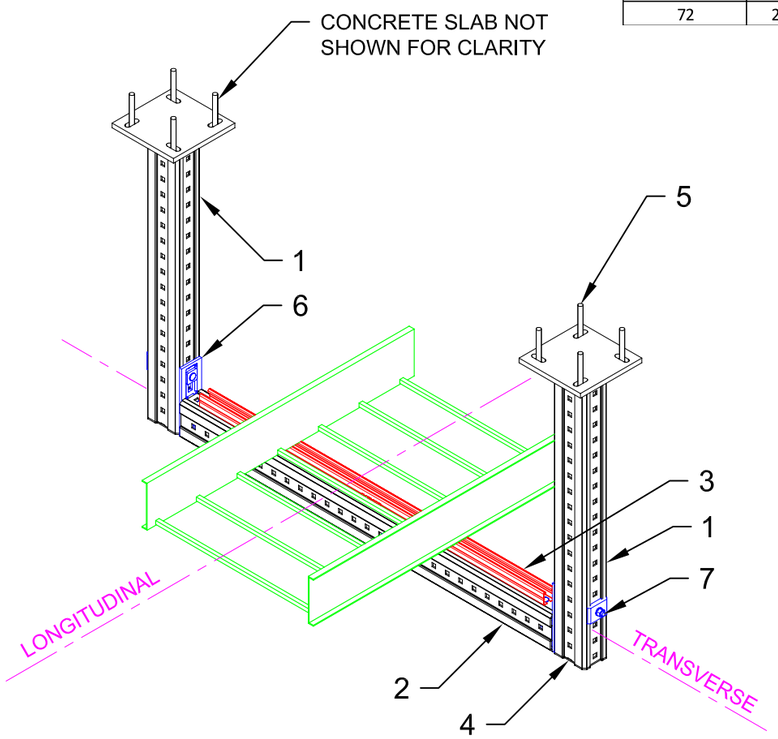

ELEV. 02
SHEET 1/1

01 ISOMETRIC
N.T.S.

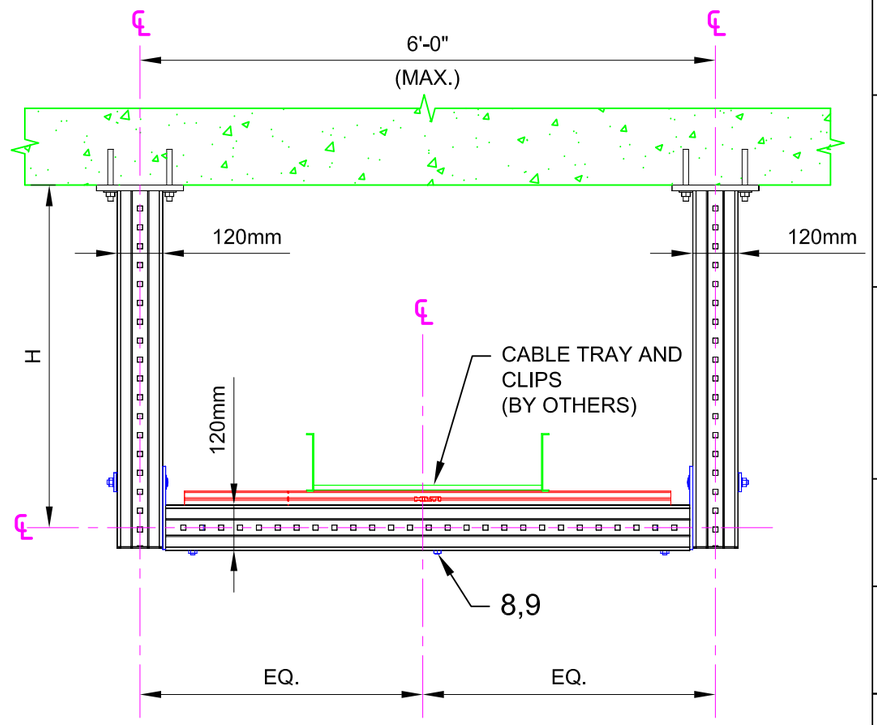

02 ELEVATION
N.T.S.

No.	Unit Qty	Unit	Description	Box Qty	# Boxes Needed	Item No.
1	2	EA	CONNECTOR MIC-C120-D-2000 WELDED BRACKET	1	2	270472
2	AS REQ'D	EA	GIRDER MI-120 3M	1	AS REQ'D	304800
3	AS REQ'D	EA	STRUT HS-158-12/HDG 10'	1	AS REQ'D	407570
4	2	EA	GIRDER END CAP MIA-EC120	25	1	432078
5	8	EA	USE KB-TZ AS APPROPRIATE	VARIES	VARIES	VARIES
6	2	EA	CONNECTOR MIC-120-U	4	1	304804
7	2	EA	EASYHAND SCREW MIA-EH120	10	1	304888
8	3	EA	ONEHAND SCREW MIA-OH120	10	1	304890
9	3	EA	PREVAIL TORQUE HEX NUT M12-F-SL-WS 3/4"	100	1	382897

NOTE(S):

1. ALLOWABLE LOADS CONSIDER APPROPRIATE LOAD FACTORS AND LOAD COMBINATIONS PER APPLICABLE CODES AND STANDARDS.
2. ALL LOADS ASSUMED TO ACT AT HORIZONTAL ℄ OF CABLE TRAY WHICH IS SITTING DIRECTLY ON TOP OF MI GIRDER, U.N.O.
3. VERTICAL LOAD APPLIED WITH ONE HORIZONTAL LOAD AT A TIME.
4. CABLE TRAY HORIZONTAL OFFSET FROM MI POST ℄ = 0"

All loading and design criteria supplied by customer is assumed accurate. Only the stated Design Assumptions were considered, and must be verified by the responsible Engineer of Record (EOR). The basis of Hilti component and connection design is the published data in the current Hilti Technical Guide, including material and cross-section properties, allowable load values, factors of safety, methods of calculation, and limiting factors. The EOR must verify suitability for any specific application, and the capacity of the supportive structure to receive the shown configuration and associated reaction loads. Modification to components and/or design may alter performance and must be evaluated by the EOR.

PROJECT NAME:

TYPICAL DETAILS

SERVICE REQUEST DESCRIPTION:

CABLE TRAY TRAPEZE CONCRETE

DESIGNED BY:	REVIEWED BY:
AJV	ISE
DRAWN BY:	ISSUE DATE:
GAB	22 DEC 2014

REVISIONS:

NO:	DESCRIPTION:	DATE:
A	ORIGINAL ISSUE	22 DEC 14

SERVICE REQUEST NUMBER:

TD-CT-TR03-C

DRAWING NUMBER:	SHEET:
01	1/1

Maximum"H" (in)	Allowable Vertical Load (lbs)	Allowable Transverse Load (lbs)	Allowable Longitudinal Load (lbs)
48	3285	0	0
48	1416	425	0
48	1208	0	362
60	3285	0	0
60	1083	325	0
60	958	0	287
72	3285	0	0
72	916	275	0
72	750	0	225

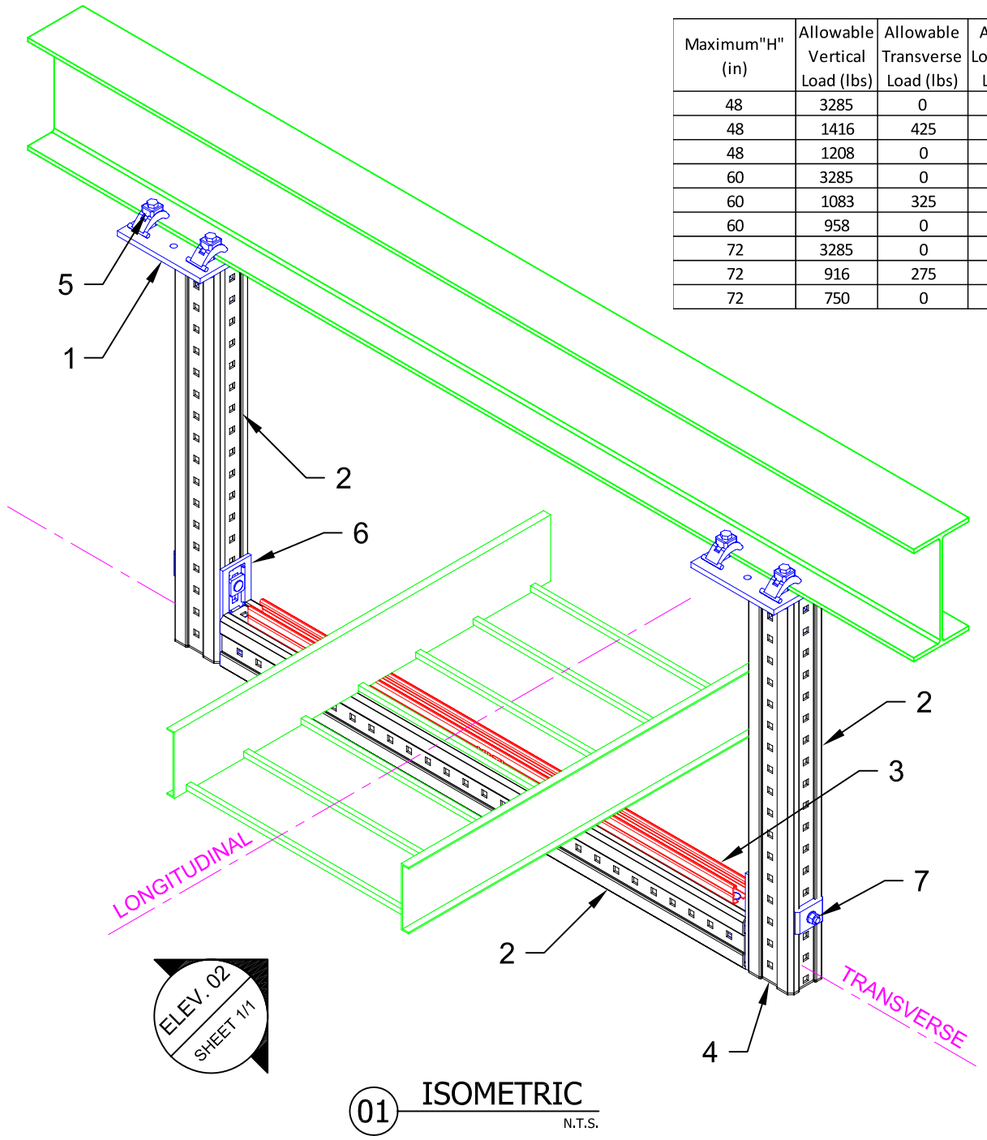

01 ISOMETRIC
N.T.S.

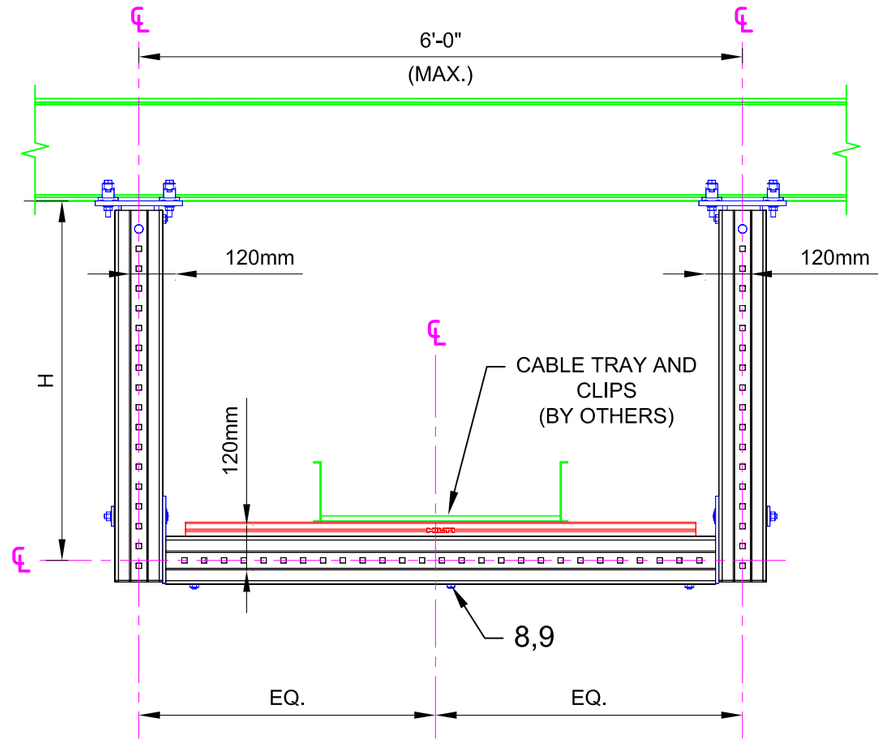

02 ELEVATION
N.T.S.

MIC-S120-X

Beam Width Table

X	'B' Width	Item No.
A	2.9 to 6.5	304818
B	6.5 to 9.2	304819
C	9.2 to 11.8	304820

No.	Unit Qty	Unit	Description	Box Qty	# Boxes Needed	Item No.
1	2	EA	CONNECTOR MIC-S120-X STEEL (SEE TABLE)	2	1	VARIES
2	AS REQ'D	EA	GIRDER MI-120 3M	1	AS REQ'D	304800
3	AS REQ'D	EA	STRUT HS-158-12/HDG 10'	1	AS REQ'D	407570
4	2	EA	GIRDER END CAP MIA-EC120	25	1	432078
5	8	EA	BEAM CLAMP MI-SGC-M12	16	1	233859
6	2	EA	CONNECTOR MIC-120-U	4	1	304804
7	2	EA	EASYHAND SCREW MIA-EH120	10	1	304888
8	3	EA	ONEHAND SCREW MIA-OH120	10	1	304890
9	3	EA	PREVAIL TORQUE HEX NUT M12-F-SL-WS 3/4"	100	1	382897

NOTE(S):

1. ALLOWABLE LOADS CONSIDER APPROPRIATE LOAD FACTORS AND LOAD COMBINATIONS PER APPLICABLE CODES AND STANDARDS.
2. ALL LOADS ASSUMED TO ACT AT HORIZONTAL ℄ OF CABLE TRAY WHICH IS SITTING DIRECTLY ON TOP OF MI GIRDER, U.N.O.
3. VERTICAL LOAD APPLIED WITH ONE HORIZONTAL LOAD AT A TIME.
4. CABLE TRAY HORIZONTAL OFFSET FROM MI POST ℄ = 0"

All loading and design criteria supplied by customer is assumed accurate. Only the stated Design Assumptions were considered, and must be verified by the responsible Engineer of Record (EOR). The basis of Hilti component and connection design is the published data in the current Hilti Technical Guide, including material and cross-section properties, allowable load values, factors of safety, methods of calculation, and limiting factors. The EOR must verify suitability for any specific application, and the capacity of the supportive structure to receive the shown configuration and associated reaction loads. Modification to components and/or design may alter performance and must be evaluated by the EOR.

PROJECT NAME:

TYPICAL DETAILS

SERVICE REQUEST DESCRIPTION:

CABLE TRAY
TRAPEZE
STEEL

DESIGNED BY: AJV

REVIEWED BY: ISE

DRAWN BY: GAB

ISSUE DATE: 22 DEC 2014

REVISIONS:

NO:	DESCRIPTION:	DATE:
A	ORIGINAL ISSUE	22 DEC 14

SERVICE REQUEST NUMBER:

TD-CT-TR03-S

DRAWING NUMBER: 01

SHEET: 1/1